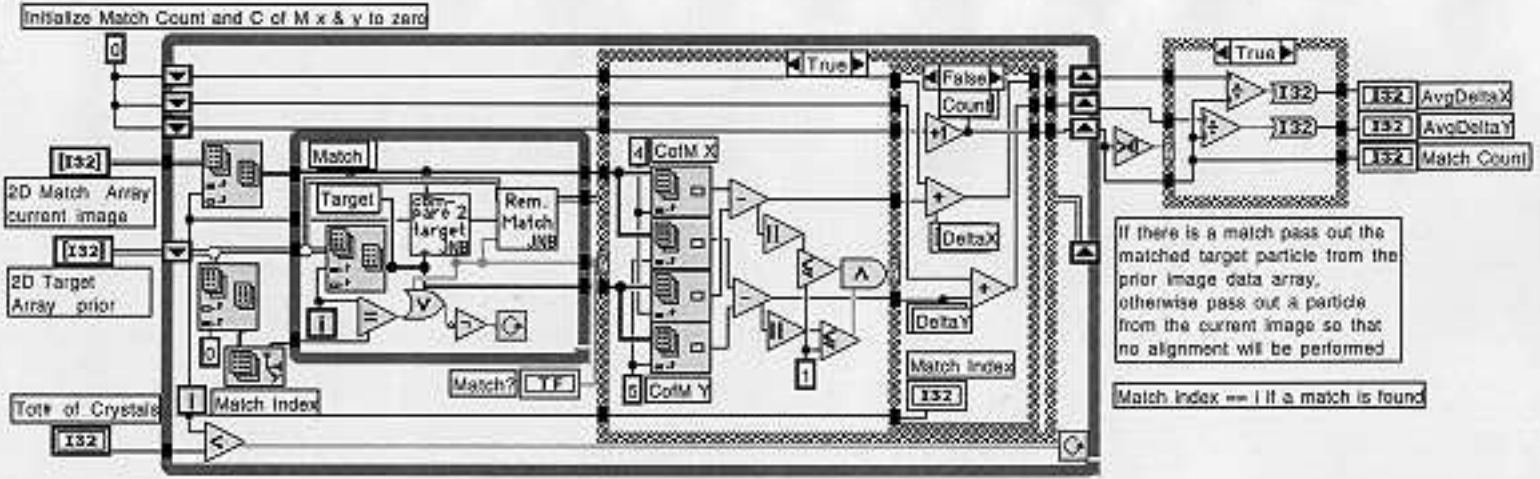
Initialize Match Count and C of M x & y to zero
0
[I32]
2D Match Array current image
[I32]
2D Target Array prior
Tot# of Crystals
I32
Match
Target
Rem. Match
Match?
TF
Match Index
4
CofM X
5
CofM Y
True
False
Count
DeltaX
DeltaY
Match Index
I32
True
I32
I32
I32
AvgDeltaX
AvgDeltaY
Match Count
If there is a match pass out the matched target particle from the prior image data array, otherwise pass out a particle from the current image so that no alignment will be performed
Match index == i if a match is found